Dual Mode Line Voltage Ceiling Sensor

⚠ WARNING: May result in serious injury or death. Turn off power at circuit breaker before installing the unit.
Attention: pour éviter un incendie, un choc électrique ou la mort. Coupez l'alimentation au disjoncteur ou au fusible et testez que l'alimentation est coupée avant le câblage

PLACEMENT GUIDLINES

Depending upon obstacles such as furniture or partitions, the area of coverage may be less or more than the sensing distances shown in the coverage pattern. This must be considered when planning the number of sensors and their placement. It is also recommended to place the sensor 4 to 6 feet away from air supply ducts as rapid air currents or the differences in temperatures may cause false activations.

Mount the sensor to the ceiling. The CS107D is designed for a ceiling height of about 8-10 feet. Mounting above or below this range will significantly affect the coverage patterns. Be aware that as you decrease the mounting height, you decrease the range and increase the sensitivity to smaller motions. Conversely, when you increase the height, you increase the range and decrease the sensitivity to smaller motions. At heights of more than 12-14 feet, you may start to significantly reduce sensitivity. As a general rule, each occupant should be able to clearly view the sensor.

Often the best location to install a CS107D in a closed office is off-center (see Figure 2). Avoid placing a sensor directly in line with an open door through which it has a clear view out, as the sensor may detect people walking by.

Open Office Area Coverage:To get complete coverage in an open office area, install multiple sensors so that there is an overlap with each adjacent sensor's coverage area.See the Figure 3.

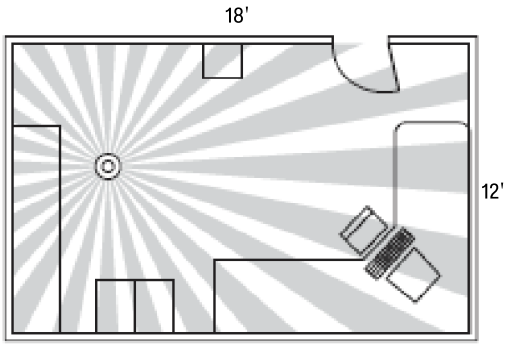

Figure 2
For large areas of coverage use multiple sensors.

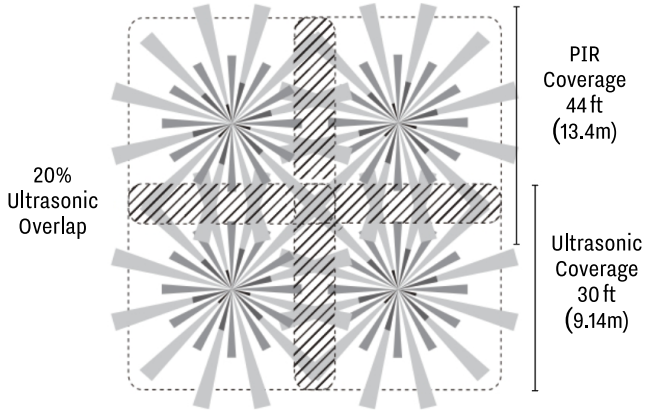

Figure 3
Mounting Height

WIRING

CS107D.A0

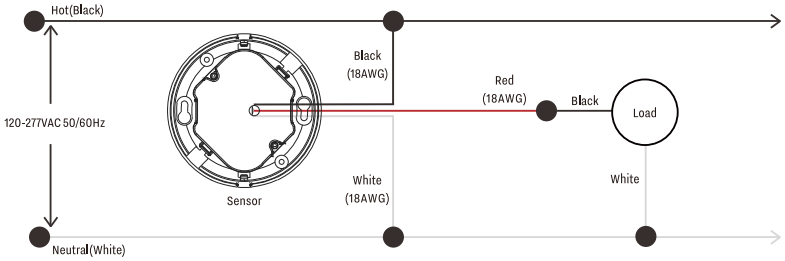

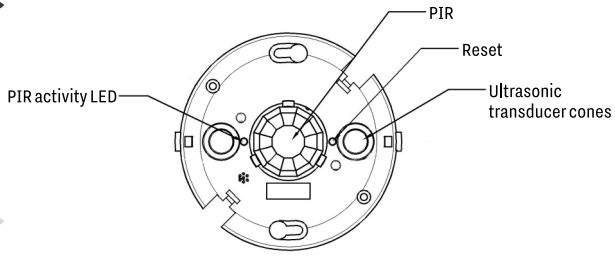

CS107D.B1

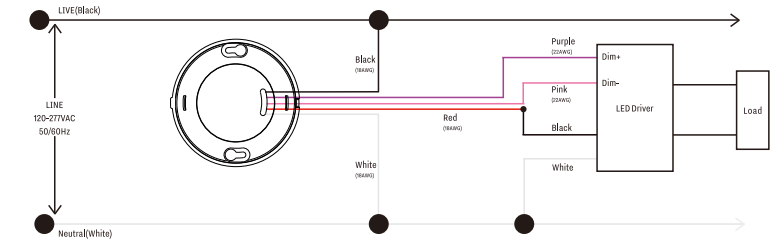

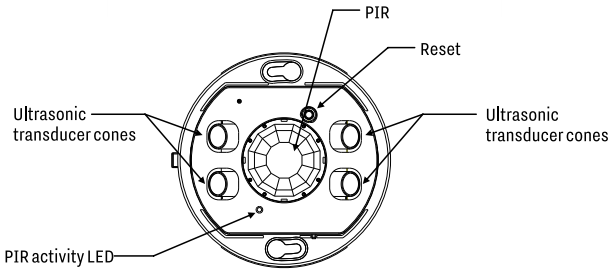

TIPS:This Bluetooth device is compatible with Keilton lighting control system only.

Keilton®

MOUNTING

Using an Octagonal Junction Box

1. Pull the high voltage wires into the J-Box through the conduit knockout.
2. Connect the high voltage wires to the appropriate terminals on the sensor.
3. Loosen the appliance mounting screws attached to the J-Box.
4. Align the sensor in the J-Box so that the mounting screws on the box match the key holes on the sensor's rear housing.
5. Push the sensor up into the J-Box and twist it so that the mounting screws are seated in the keyhole slots.
6. Tighten the two screws to secure the sensor to the J-Box.
7. Snap the front cover onto the sensor.

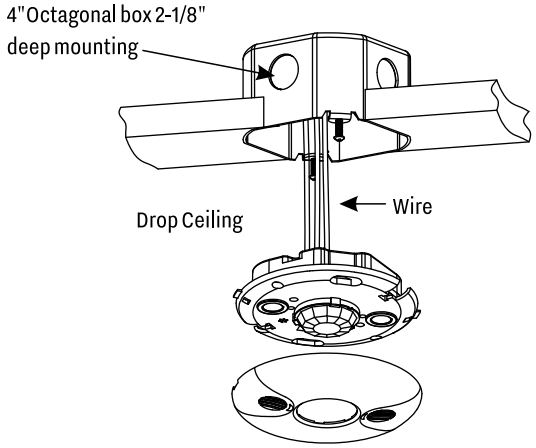

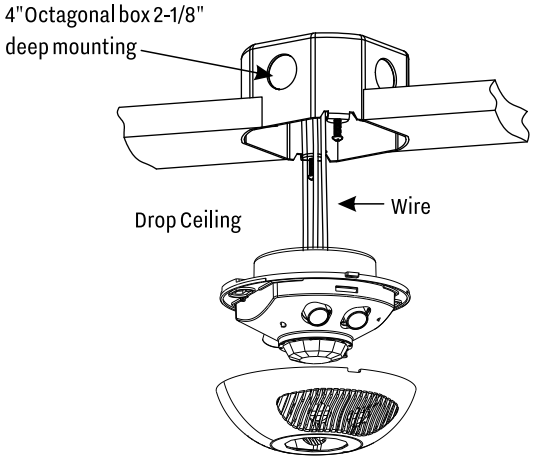

PAIRING INSTRUCTIONS

1. Open the Keilton APP to access the switch interface.
2.Click on "Add" to start searching for the switch and pair it with the device.
3.Click "Done" to successfully complete the pairing process.

Note: You can only link light groups, not individual light fixtures.

How to Install Keilton APP?

Scan below QR code for downloading the APP.

Download on the App Store

GET IT ON Google Play

How to Control Lights with a Phone?

Scan to download Keilton APP instruction

WARRANTY INFORMATION

Our company warranties this product to be free of defects in materials and workmanship for a period of five(5) years.There are no obligations or liabilities on the part of our company for consequential damages arising out of, or in connection with, the use or performance of this product or other indirect damages with respect to loss of property, revenue or profit, or cost of removal, installation or reinstallation.
Contact: sales@litetrace.com